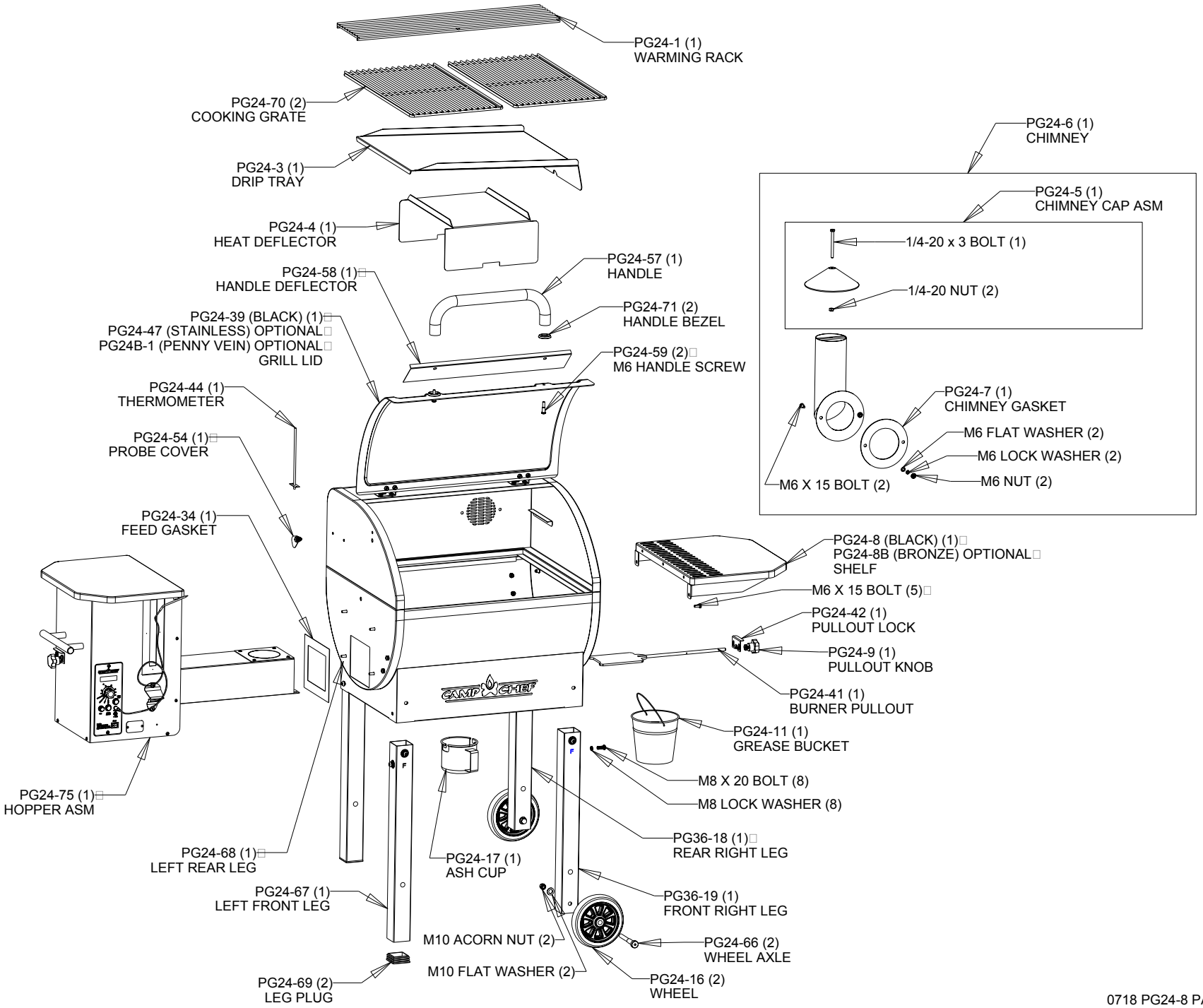

0718 PG24-8 PARTS

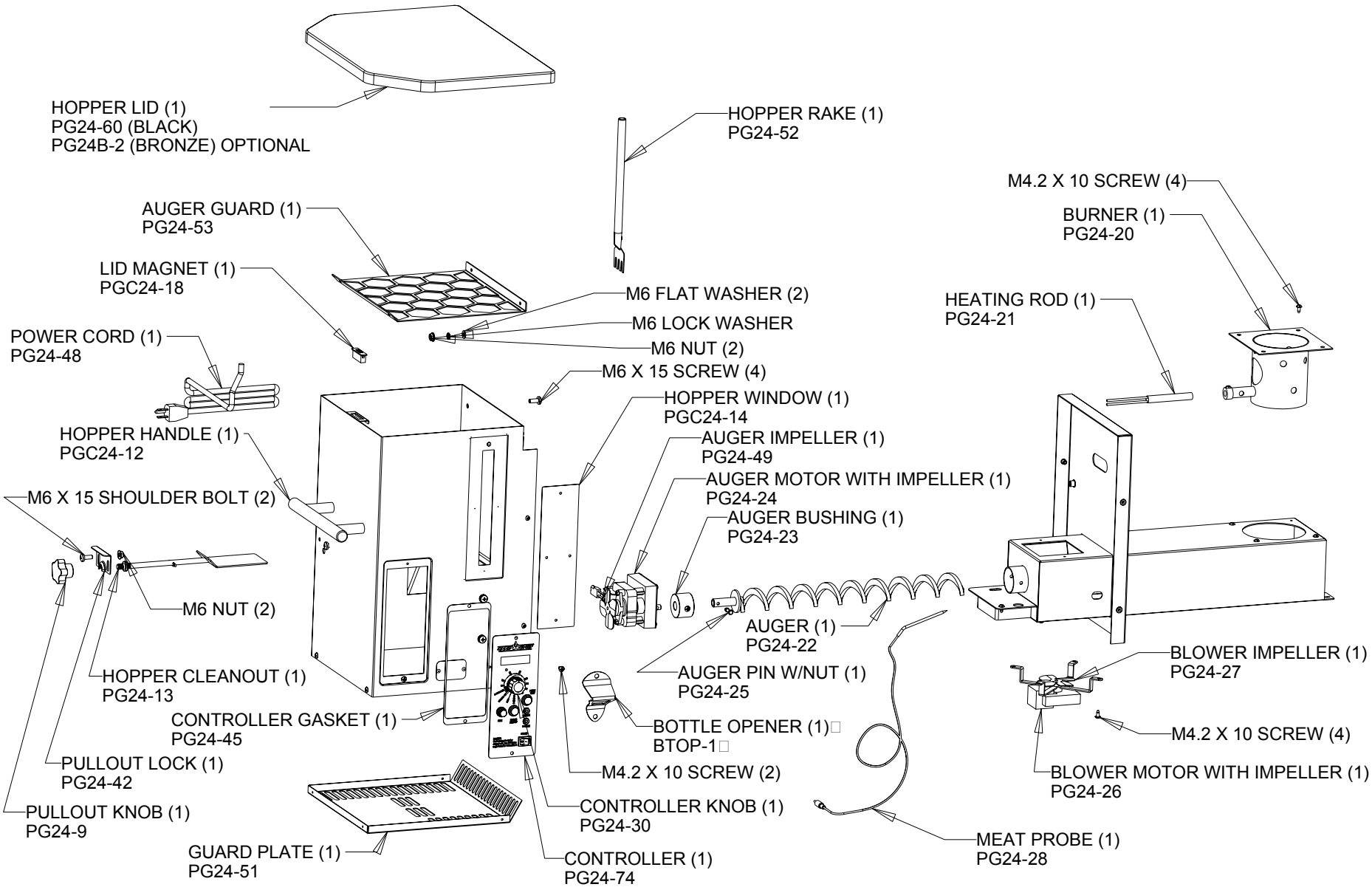
HOPPER LID (1)
PG24-60 (BLACK)
PG24B-2 (BRONZE) OPTIONAL
HOPPER RAKE (1)
PG24-52
M4.2 X 10 SCREW (4)
BURNER (1)
PG24-20
AUGER GUARD (1)
PG24-53
LID MAGNET (1)
PGC24-18
M6 FLAT WASHER (2)
M6 LOCK WASHER
M6 NUT (2)
HEATING ROD (1)
PG24-21
POWER CORD (1)
PG24-48
M6 X 15 SCREW (4)
HOPPER WINDOW (1)
PGC24-14
HOPPER HANDLE (1)
PGC24-12
AUGER IMPELLER (1)
PG24-49
AUGER MOTOR WITH IMPELLER (1)
PG24-24
M6 X 15 SHOULDER BOLT (2)
AUGER BUSHING (1)
PG24-23
M6 NUT (2)
AUGER (1)
PG24-22
BLOWER IMPELLER (1)
PG24-27
HOPPER CLEANOUT (1)
PG24-13
AUGER PIN W/NUT (1)
PG24-25
CONTROLLER GASKET (1)
PG24-45
BOTTLE OPENER (1)
BTOP-1
M4.2 X 10 SCREW (4)
PULLOUT LOCK (1)
PG24-42
M4.2 X 10 SCREW (2)
BLOWER MOTOR WITH IMPELLER (1)
PG24-26
PULLOUT KNOB (1)
PG24-9
CONTROLLER KNOB (1)
PG24-30
MEAT PROBE (1)
PG24-28
GUARD PLATE (1)
PG24-51
CONTROLLER (1)
PG24-74