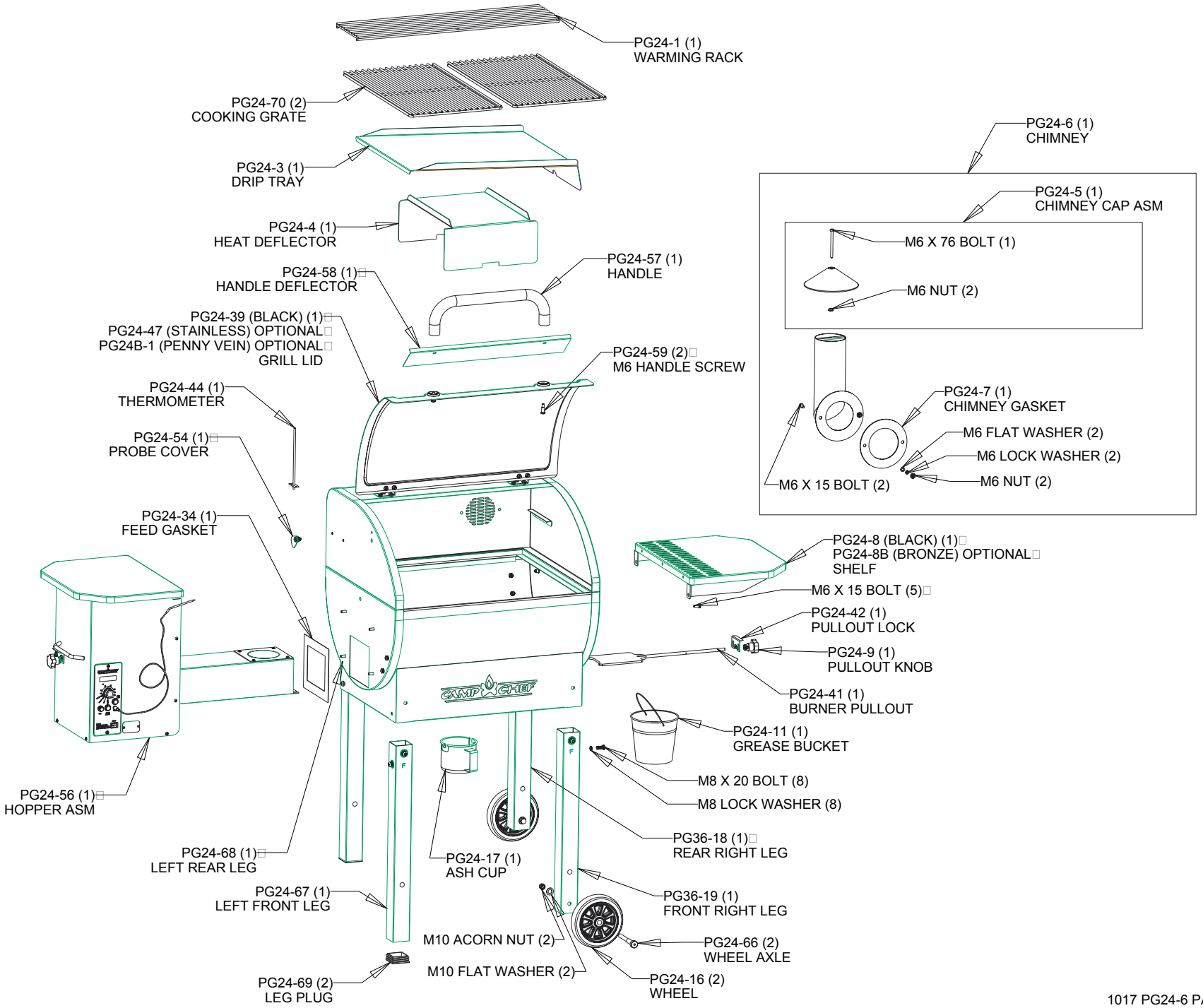

1017 PG24-6 PARTS

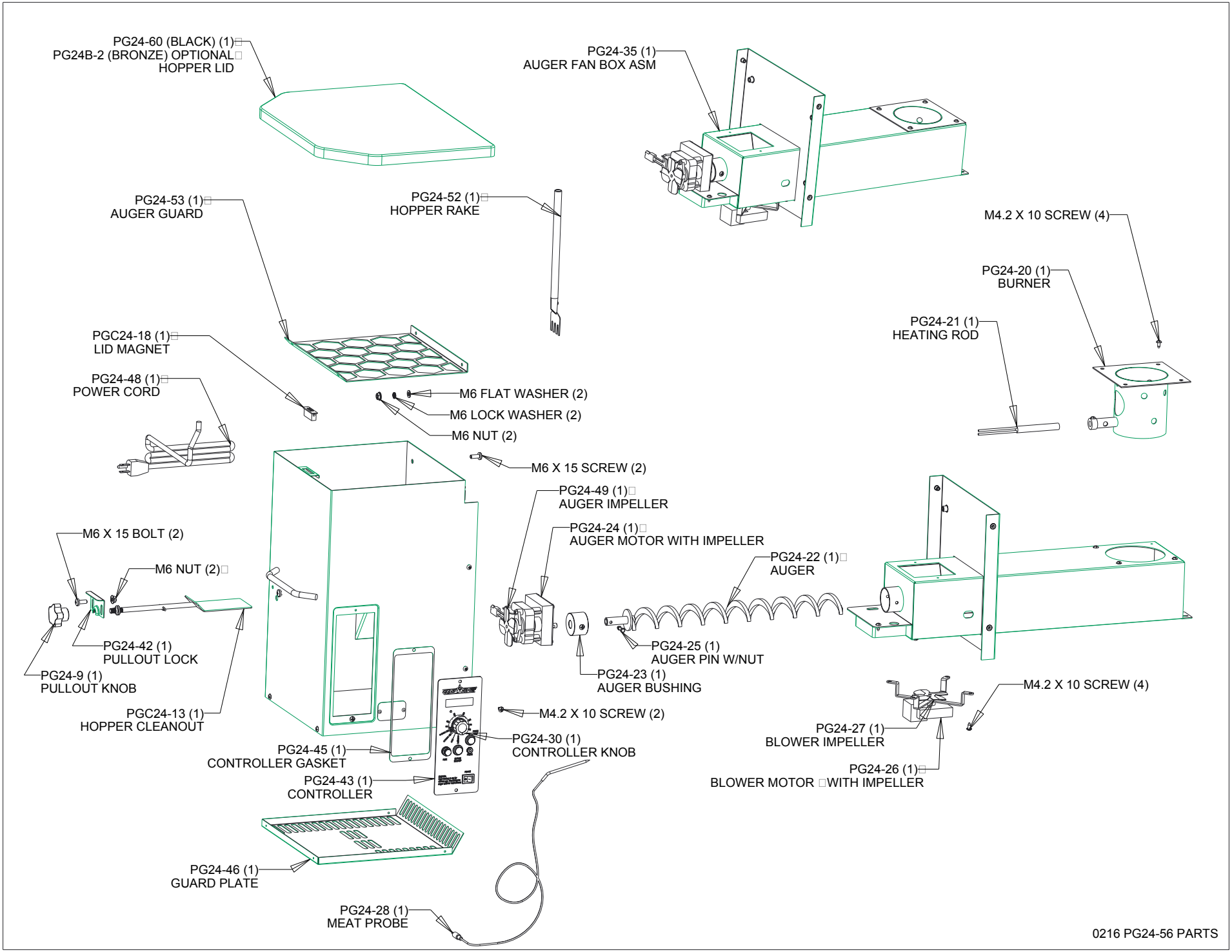

0216 PG24-56 PARTS