TB90LWG-2 PARTS LIST

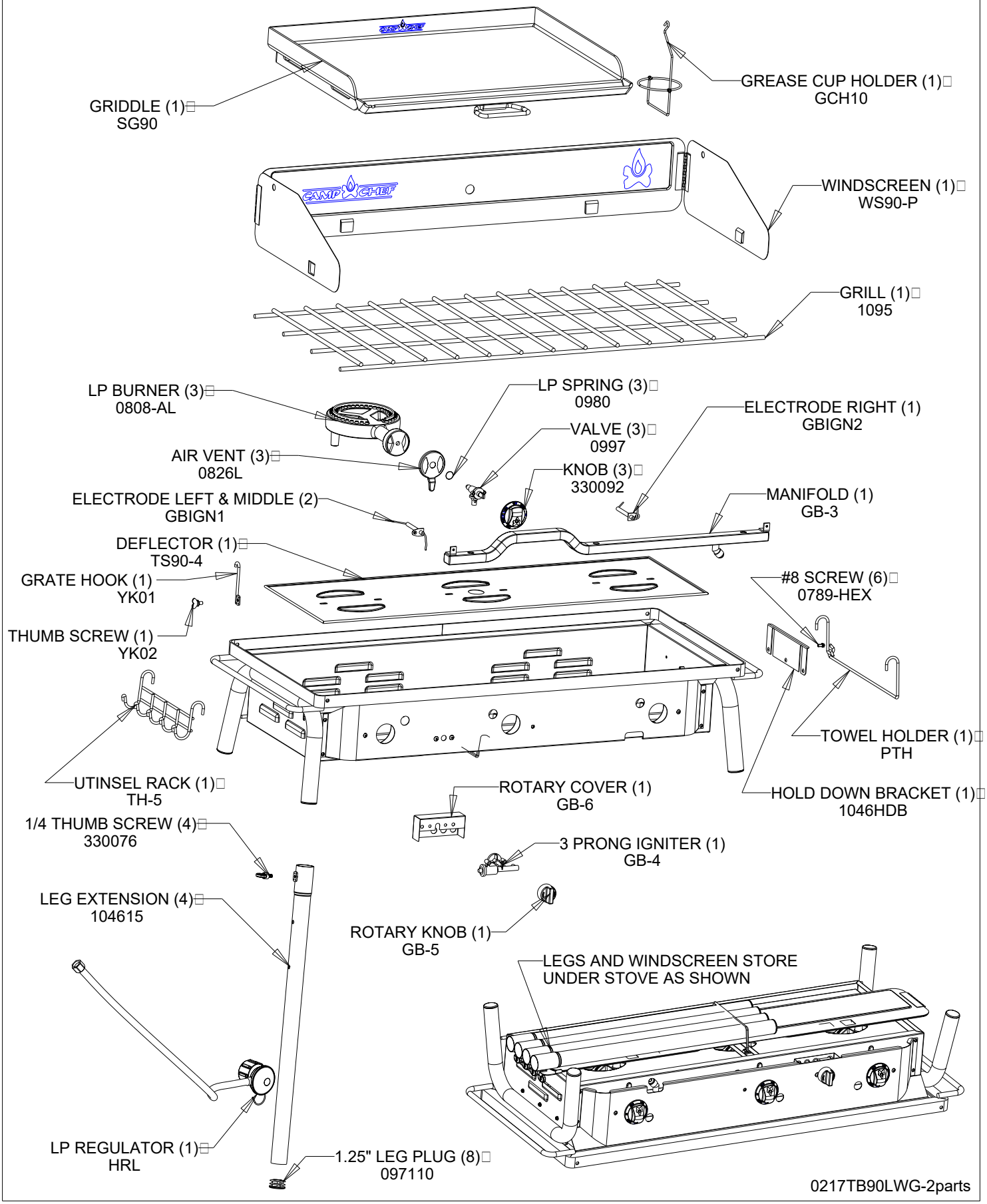

0217TB90LWG-2parts