TB90LWG-2 PARTS LIST

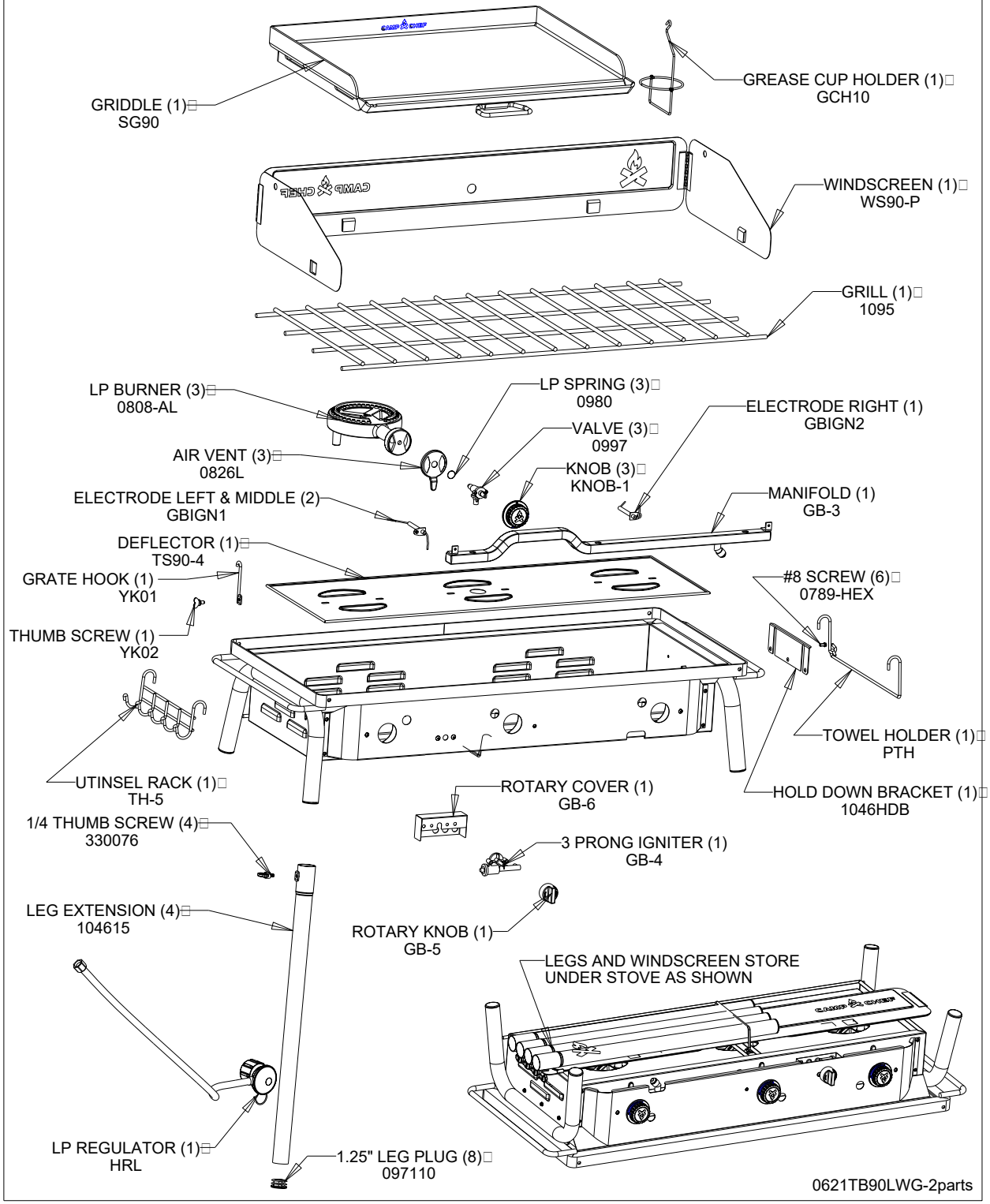

0621TB90LWG-2parts