ITEMS NOT SHOWN -
20 POUNDS LAVA ROCK
PATIO COVER

MODEL - FP29LG -5

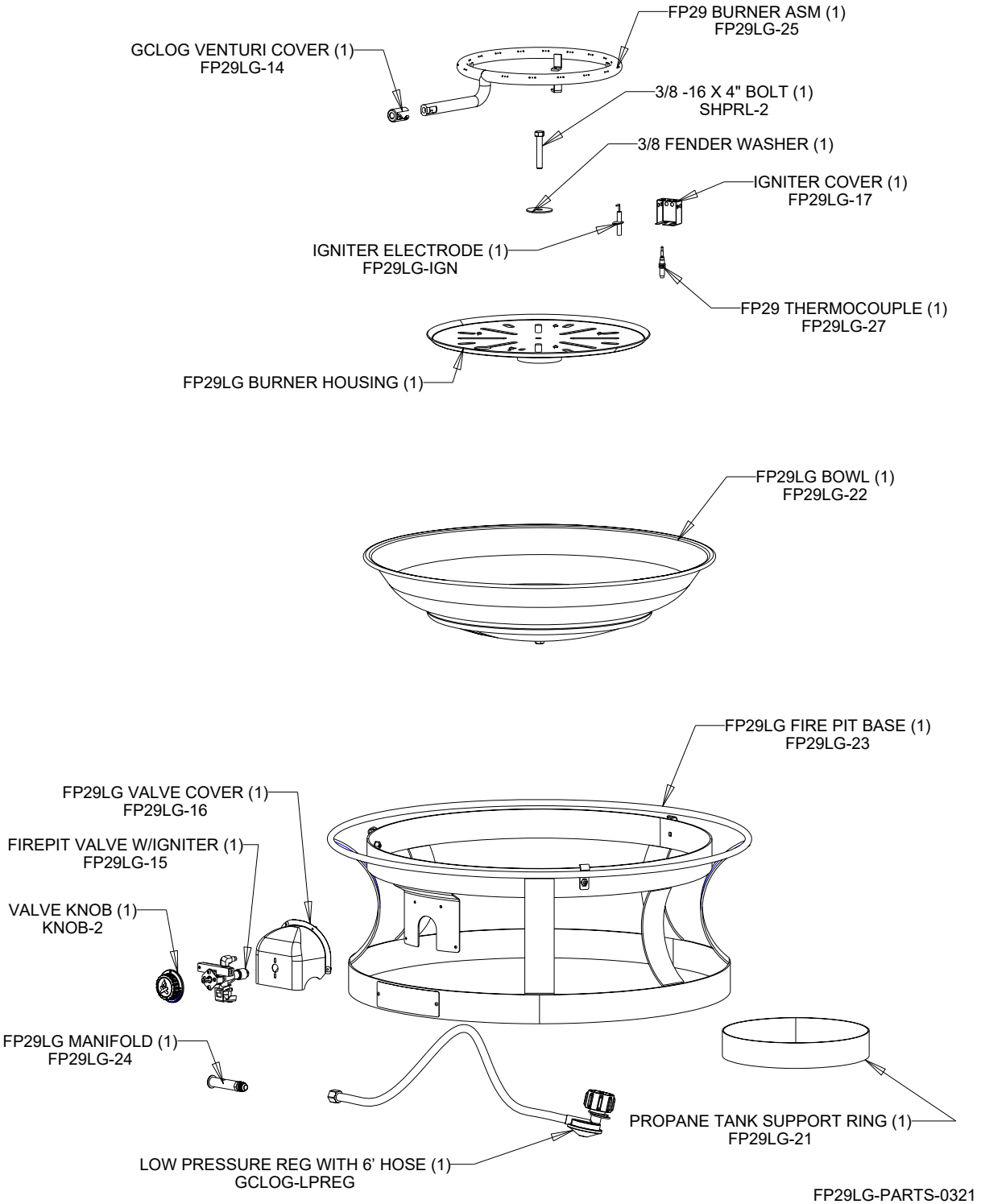

FP29LG-PARTS-0321