PIZZA CART PARTS LIST

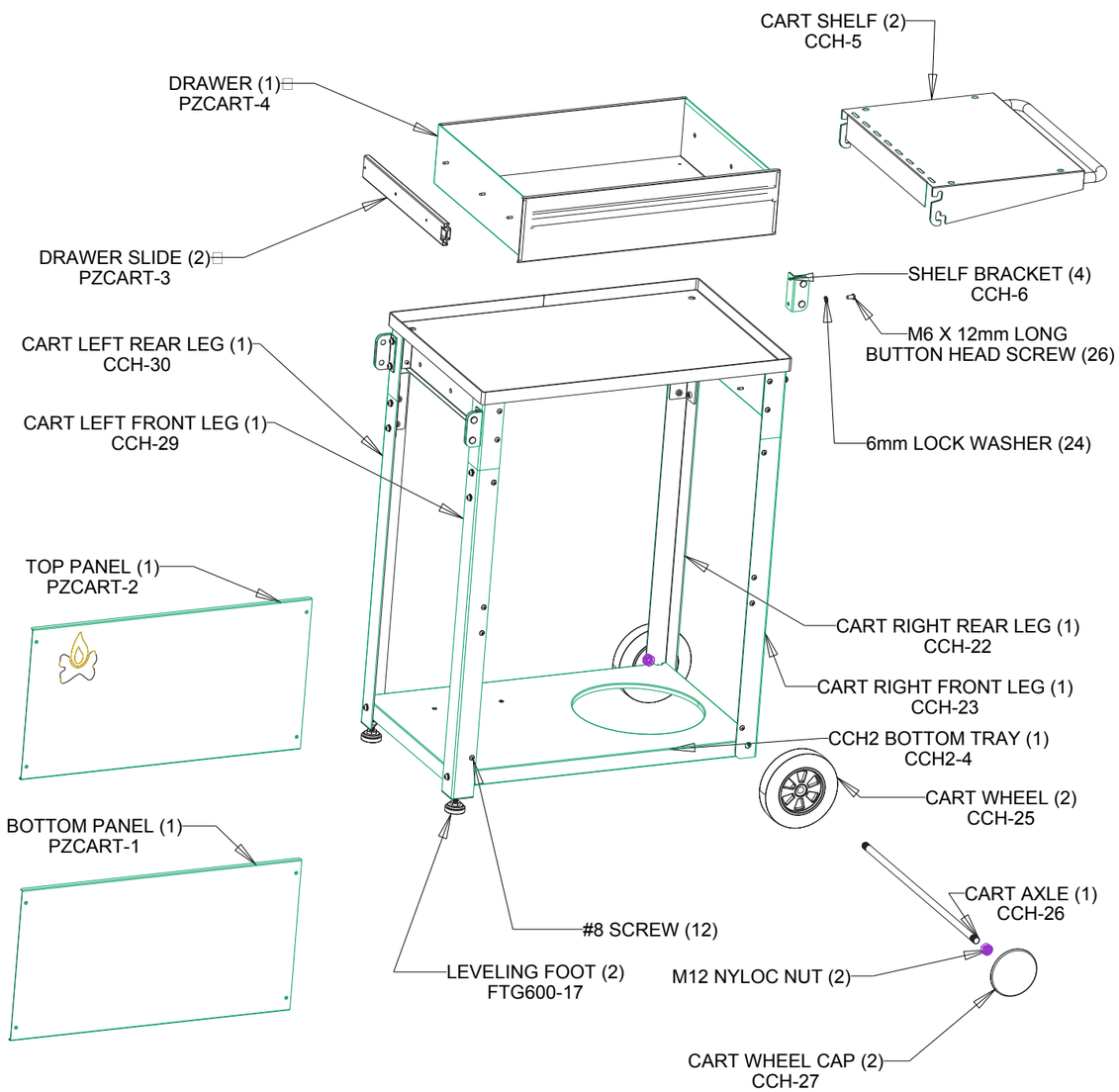

0516-PZCART-PARTS